Straightaway 50 Residential Sliding & Folding Door Systems

Door Specifications

- Maximum Door Weight: 50kg
- Door Thickness: 20mm minimum when fixing guide to underside of door 25mm minimum when rebating channel to underside of door
- Door Construction: Timber doors only
- Maximum Door Width: 1200mm
- Maximum Door Height: 2100mm
- Track Dimensions: 27mm (w) x 25mm (h)

Hardware Specifications

- Aluminium top track fixed directly to soffit if required
- Nylon roller guide to be floor fixed (one guide for single doors) or fixed to underside of door (two guides per single door, also suitable when multiple door configurations are used)
- Steel side fixing brackets included in track sets
- Aluminium bottom channel if required
- Nylon wheeled hangers for smooth operation
- Synchronised operation achievable for bi parting doors with use of simultaneous operator
- Detachable door plates enable easy and efficient installation
- Soft close available

Straightaway 50

Residential Sliding & Folding Door Systems

Product Overview

Straightaway 50 is an internal sliding door system for medium weight internal doors.
It is suited to applications such as walk in wardrobes and is an easy to fit reliable system.

Technical Specification

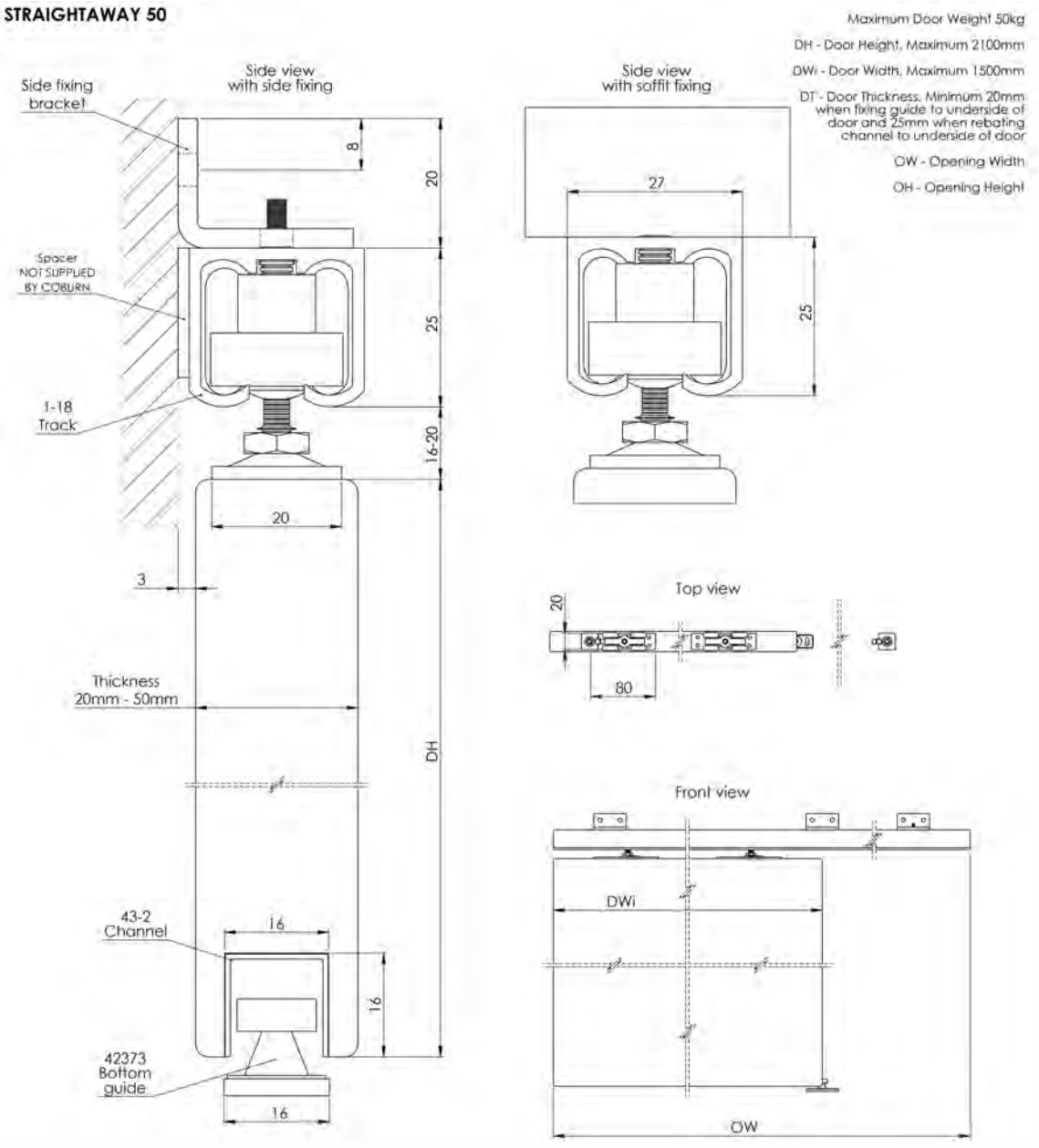

Residential
Sliding & Folding
Door Systems

For further information please contact us:
Tel: +44 (0)20 8545 6680 sales@coburn.co.uk www.coburn.co.uk

Straightaway 50

Residential Sliding & Folding Door Systems

Article No.	Description	Image
01818	Trackset for one door up to 900mm	
01824	Trackset for one door up to 1200mm	
01050	Hanger pack	
118	Aluminium top track available in 1.2m, 1.8m, 2.4m and 5.0m lengths	
01030	Side fixing bracket (pack of 3)	
01040	Side fixing bracket (pack of 4)	
01005	Side fixing bracket (pack of 5)	
01008	Side fixing bracket (pack of 8)	
432	Aluminium bottom channel available in 1.2m, 1.8m, 2.1m, 2.4m and 3.6m lengths	
42373	Straightaway 50 guide (pack of 2)	
30601	Soft closer soffit fix	

Article No.	Description	Image
30602	Soft closer side fix	
30701	Self closer (not suitable for use with side fixed soft closer)	
61401	Simultaneous operator (not suitable for use with side fix soft closer) for doors up to 800mm	
61403	Simultaneous operator (not suitable for use with side fix soft closer) for doors up to 1200mm	
95680	Circular flush pull, 57mm Ø, silver anodised aluminium (For our full range of accessories see pages 96-97)	

Trackset contents: Aluminium top track, brackets, nylon wheeled hangers, track end pieces, nylon roller guide, spanner and all woodscrews.

Note: Hanger pack contents as per trackset contents with the exception of track and brackets.

Residential
Sliding & Folding
Door Systems

For further information please contact us:
Tel: +44 (0)20 8545 6680 sales@coburn.co.uk www.coburn.co.uk

Straightaway 50

Residential Sliding & Folding Door Systems

Residential
Sliding & Folding
Door Systems

For further information please contact us:
Tel: +44 (0)20 8545 6680 sales@coburn.co.uk www.coburn.co.uk

COBURN
SLIDING SYSTEMS
Integrating Style & Function

Straightaway 100 Residential Sliding & Folding Door Systems

Door Specifications

- Maximum Door Weight: 100kg
- Door Thickness: 20mm - 50mm
  Minimum door thickness 30mm when using channel
- Door Construction:
  Timber framed, panelled or glazed with adequate top rail for secure fixing of hanger. Can also be used for metal doors of light angle or channel frame construction minimum thickness 40mm
- Maximum Door Height: 2700mm
- Track Dimensions:
  28mm (w) x 30mm (h) Galvanised Steel
- Track Dimensions:
  31mm (w) x 30mm (h) Aluminium

Hardware Specifications

- Top track can be soffit fixed or side fixed with additional brackets
- Range of bottom guiding available to achieve clear thresholds
- Side fixing brackets included in track sets
- Nylon wheeled hangers for smooth operation
- For single, bi parting or bi passing doors
- Detachable door plates enable easy and efficient installation
- Soffit and side fixed soft close available for doors up to 70kgs
- Self close available
- Hangers allow vertical and lateral adjustment

Straightaway 100

Residential Sliding & Folding Door Systems

Product Overview

Straightaway 100 is a top hung sliding door system for heavier weight doors. It can be used internally and externally and is suited to applications where large sliding doors are required to slide effortlessly such as room dividers and room entrances. It is an easy to fit reliable system.

Technical Specification

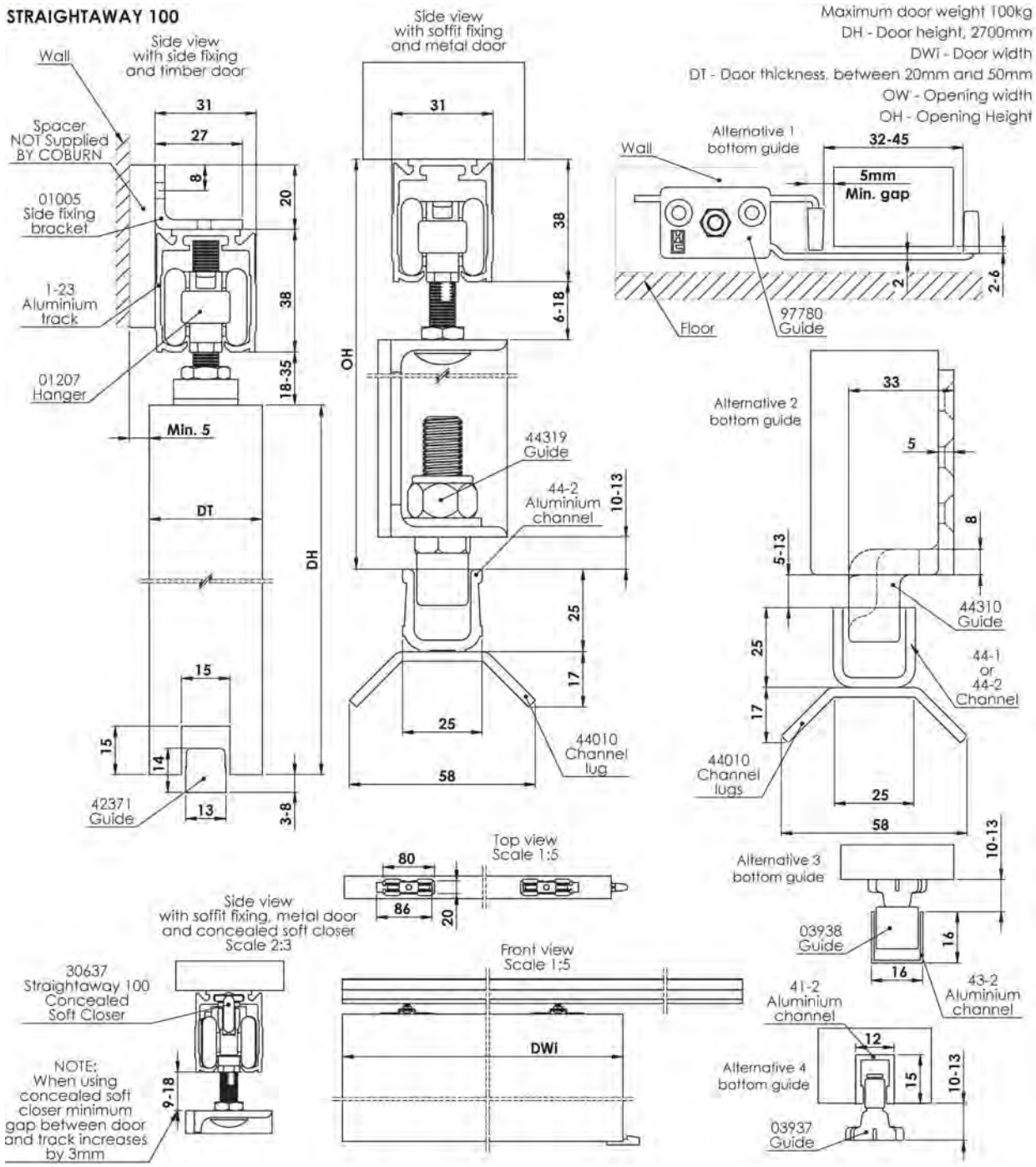

Residential
Sliding & Folding
Door Systems

For further information please contact us:
Tel: +44 (0)20 8545 6680 sales@coburn.co.uk www.coburn.co.uk

Straightaway 100

Residential Sliding & Folding Door Systems

Article No.	Description	Image
01218	Trackset for one door up to 950mm	
01224	Trackset for one door up to 1250mm	
123	Anodised aluminium top track, available in 1.5, 1.8, 2.1, 2.4 and 3.0m lengths	
412	Aluminium channel for use with 03937 guide, available in 1.5, 1.8, 2.1, 2.4 and 3.0m lengths	
432	Aluminium channel for use with 03938 guide, available in 2.0, 2.4, 3.0, 3.6, 4.0 and 6.0m lengths	
442	Aluminium channel for use with 44319 guide, available in 1.5, 1.8, 2.1, 2.4, 3.0, 3.6 and 6.0m lengths	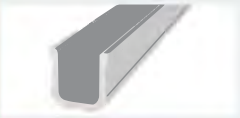
01725	Track end piece (pair)	
01208	Single door component pack	
01207	Pair of nylon wheeled hangers	
01005	Steel side fixing bracket (pack of 5)	
01008	Steel side fixing bracket (pack of 8)	

Article No.	Description	Image
03937	Adjustable rattleproof guide with 6mm roller. For use with 412 channel	
03938	Adjustable rattleproof guide with 13mm ball bearing roller. For use with 432 channel	
44319	Pair of nylon roller guides for metal doors. For use with 442 channel	
97780	Adjustable guide for jamb fixing or interior doors up to 1500mm, 30-45mm thick	
30611	Soft closer – side fix 70kg	
30613	Soft closer – soffit fix 70kg	
30701	Self closer – 100kgs	
61401	Simultaneous synchro kit for doors up to 800mm	
61403	Simultaneous synchro kit for doors up to 1200mm	
95681	Circular flush pull, 57mm Ø, polished brass (For our full range of accessories see pages 96-97)	

Trackset contents: Aluminium top track, brackets, nylon wheeled hangers, track end pieces with retaining catch, nylon floor guide designed to run in rebate in underside of door, spanner and all woodscrews.

Component pack contents: Nylon wheeled hangers, track end pieces with retaining catch, adjustable guide for fixing to reveal, spanner and all woodscrews.

Galvanised steel track and various other guiding options available.

Contact Coburn for further details.

Residential
Sliding & Folding
Door Systems

For further information please contact us:
Tel: +44 (0)20 8545 6680 sales@coburn.co.uk www.coburn.co.uk

Straightaway 100

Residential Sliding & Folding Door Systems

Residential
Sliding & Folding
Door Systems

For further information please contact us:
Tel: +44 (0)20 8545 6680 sales@coburn.co.uk www.coburn.co.uk

COBURN
SLIDING SYSTEMS
Integrating Style & Function