640.7025.01

DIN Latch Case – 60mm backset – Radius Corners

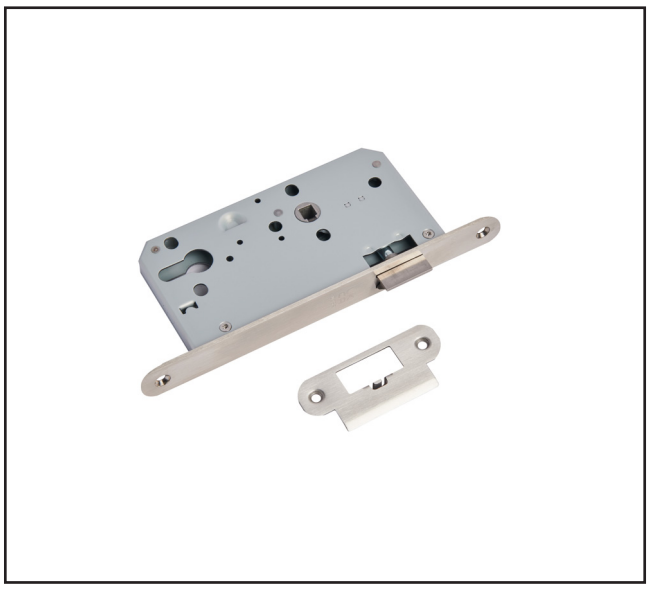

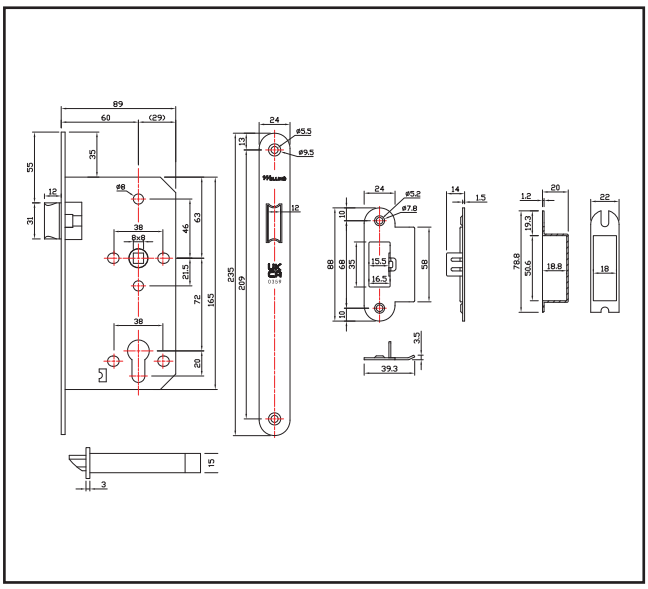

Product Specification

Strike and Dust box included.

Specification

Finish	Satin Stainless Steel
Type	Latch
Backset	60mm
Centres	72mm
Follower Size	8mm
Forend	Radius
Forend Size	L 235mm x W 24mm x T 3mm
Handed	Non Handed
UKCA Marked	Yes
Fire Rated	240 Minutes
Tested	EN12209
Tested	EN 1634-1
Guarantee	10 Years

For more information please contact
01451 824110 | sales@wellinguk.com | www.wellinguk.com
Welling Ironmongery Ltd, Unit R1, Bourton Industrial Park, Bourton on the Water GL54 2HQ

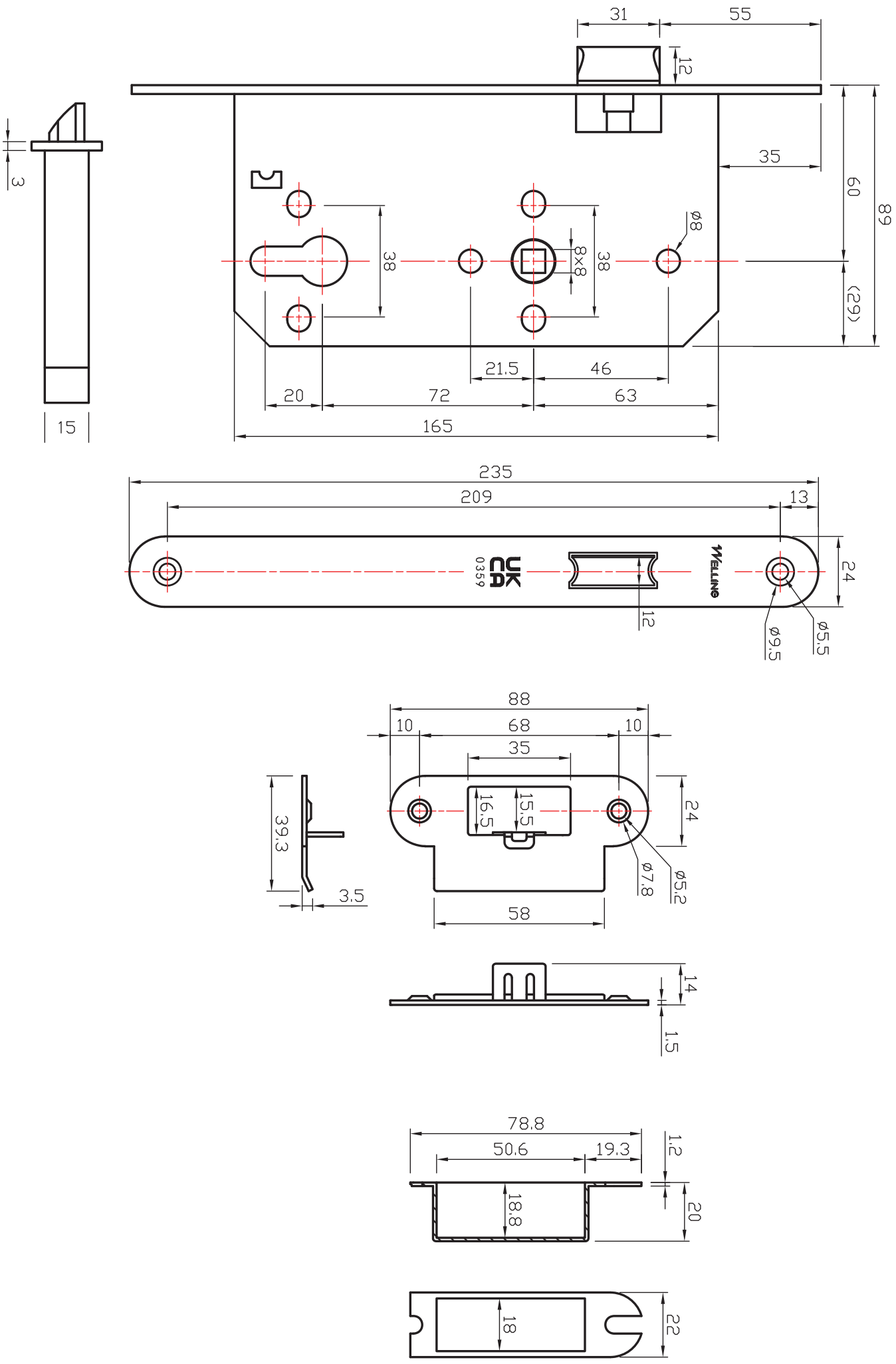
31
55
12
35
60
89
(29)
3
15
38
8x8
38
ø8
21.5
46
20
72
63
165
235
209
13
24
12
ø9.5
ø5.5
0359
WELLING
88
10
68
10
35
16.5
15.5
24
39.3
3.5
ø7.8
ø5.2
58
14
1.5
78.8
50.6
19.3
1.2
18.8
20
18
22