550.4175.39

Lift Off Hinge - Left Hand - Radius Corners

Making Ironmongery Easy

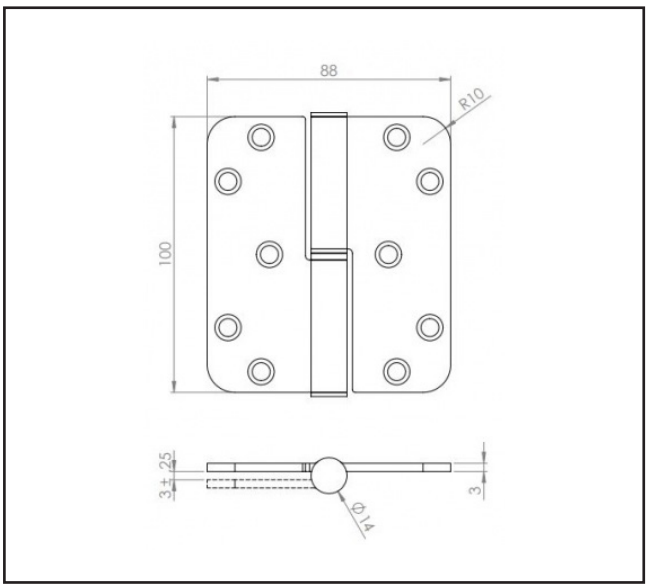

Product Specification

Lift off, washered hinges, suitable for use with aluminium and timber door frames

Please note that these hinges are handed, see below handing diagram

Specification

Finish	Black
Handing	Left Hand
Size	100 x 88 x 3mm
Max Door Weight	120kg
Screws Included	Yes
Sold as	Pair

Left Hand

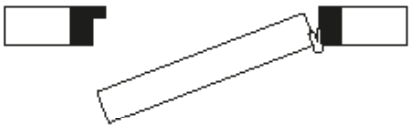

Right Hand

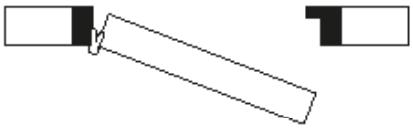

For more information please contact
01451 824110 | sales@wellinguk.com | www.wellinguk.com
Welling Ironmongery Ltd, Unit R1, Bourton Industrial Park, Bourton on the Water GL54 2HQ