120.0198.01

Guardsman Offset/Cranked Pull Handles - Back to Back - Grade 316

Making Ironmongery Easy

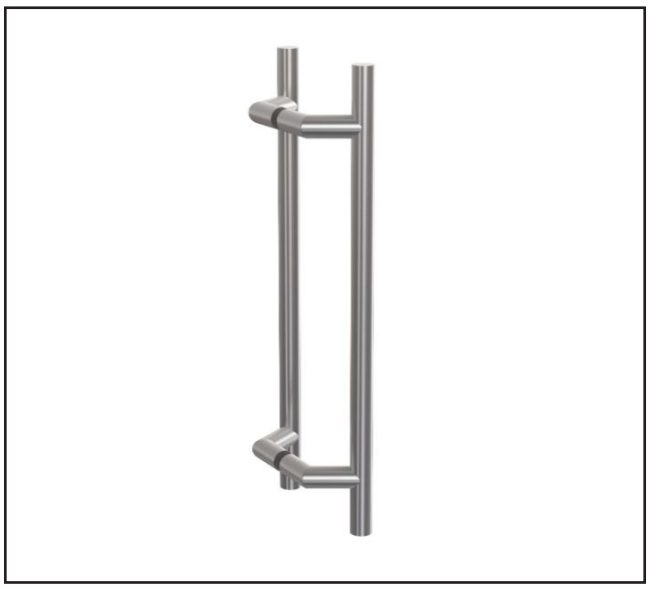

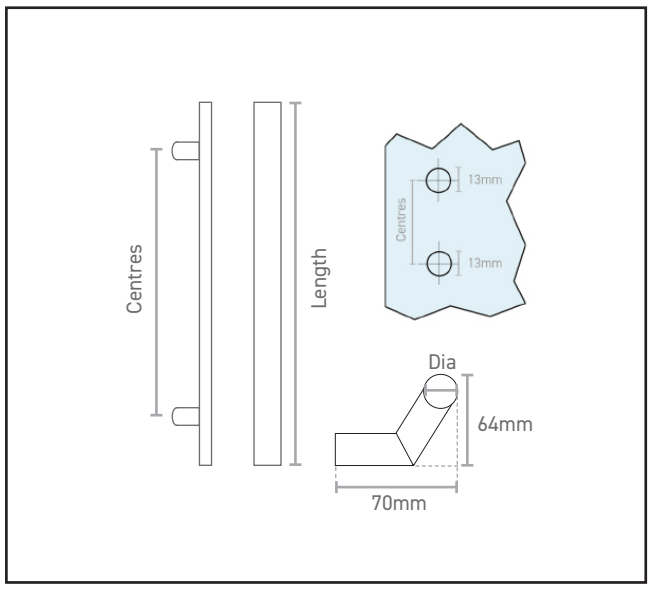

Product Specification

Guardsman Offset/Cranked Pull Handles
Back to Back
Grade 316
Pair

Specification

Finish	Satin Stainless Steel
Fixing Centres	1000mm
Overall Length	1200mm
Diameter	25mm
Fixing Type	Back to Back
Fixing Hole Size	13mm Diameter - Glass Doors

For more information please contact
01451 824110 | sales@wellinguk.com | www.wellinguk.com
Welling Ironmongery Ltd, Unit R1, Bourton Industrial Park, Bourton on the Water GL54 2HQ