570.1014.39

Angle Stop for Glass Doors with Buffers

Making Ironmongery Easy

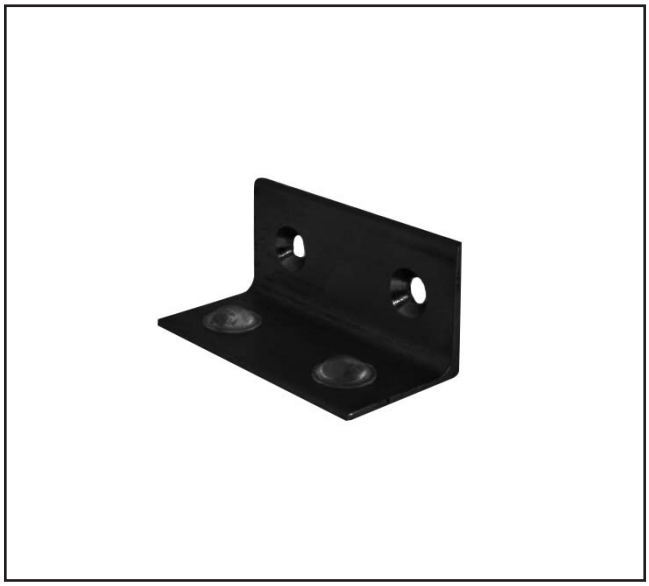

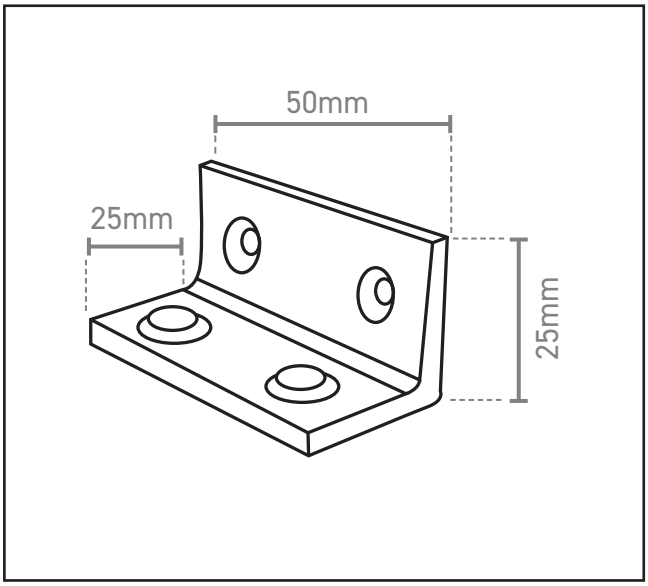

Product Specification

Ideal for frameless glass doors
Fixes to the head-track and prevents the door swinging both ways
Includes rubber buffers to cushion the door

Specification

Finish	Black
Dimensions	25 x 25mm
Length	50mm
Thickness	2mm

For more information please contact
01451 824110 I sales@wellinguk.com I www.wellinguk.com
Welling Ironmongery Ltd, Unit R1, Bourton Industrial Park, Bourton on the Water GL54 2HQ