570.3212.02

180° Glass Door Hinge - Glass to Wall

Making Ironmongery Easy

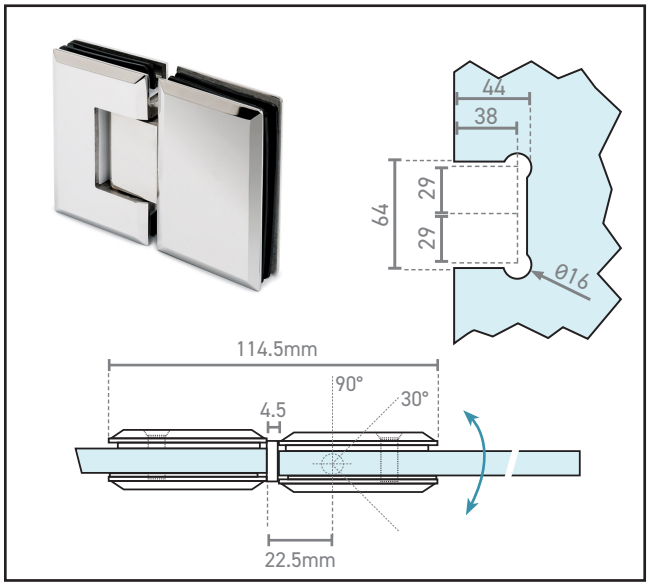

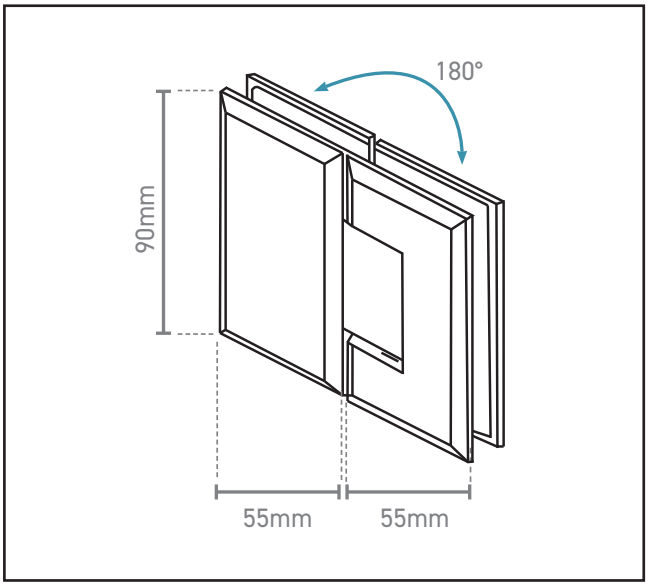

Product Specification

A simple, good quality free-swinging hinge for frameless glass doors fitting to a glass side panel/wall
Self centering from 30°
Double Action 90° opening

Specification

Finish	Polished Chrome
Glass Thickness	10-12mm
Max Door Width	900mm
Max Door Weight	40kg
Sold as	Each

For more information please contact
01451 824110 I sales@wellinguk.com I www.wellinguk.com
Welling Ironmongery Ltd, Unit R1, Bourton Industrial Park, Bourton on the Water GL54 2HQ